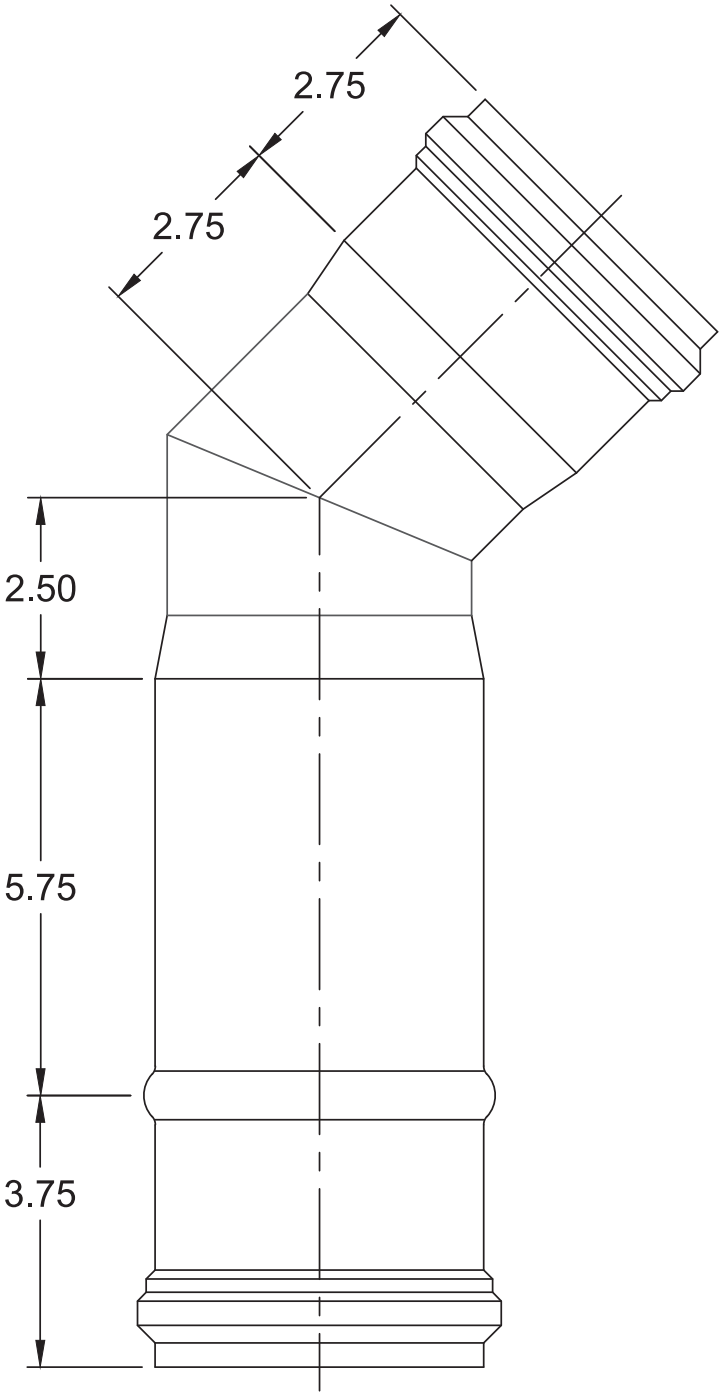

GPK PRODUCTS,INC.

FOR REFERENCE ONLY DIMENSIONS SUBJECT TO CHANGE

TITLE

4" x 45 DEGREE EL DEEP SOCKET GxDSG
D3034/F1336 SDR 26 PSM PVC

1-800-437-4670 FARGO, ND	DATE 6-24-10	SCALE NONE	PART NO. 951-0DS4