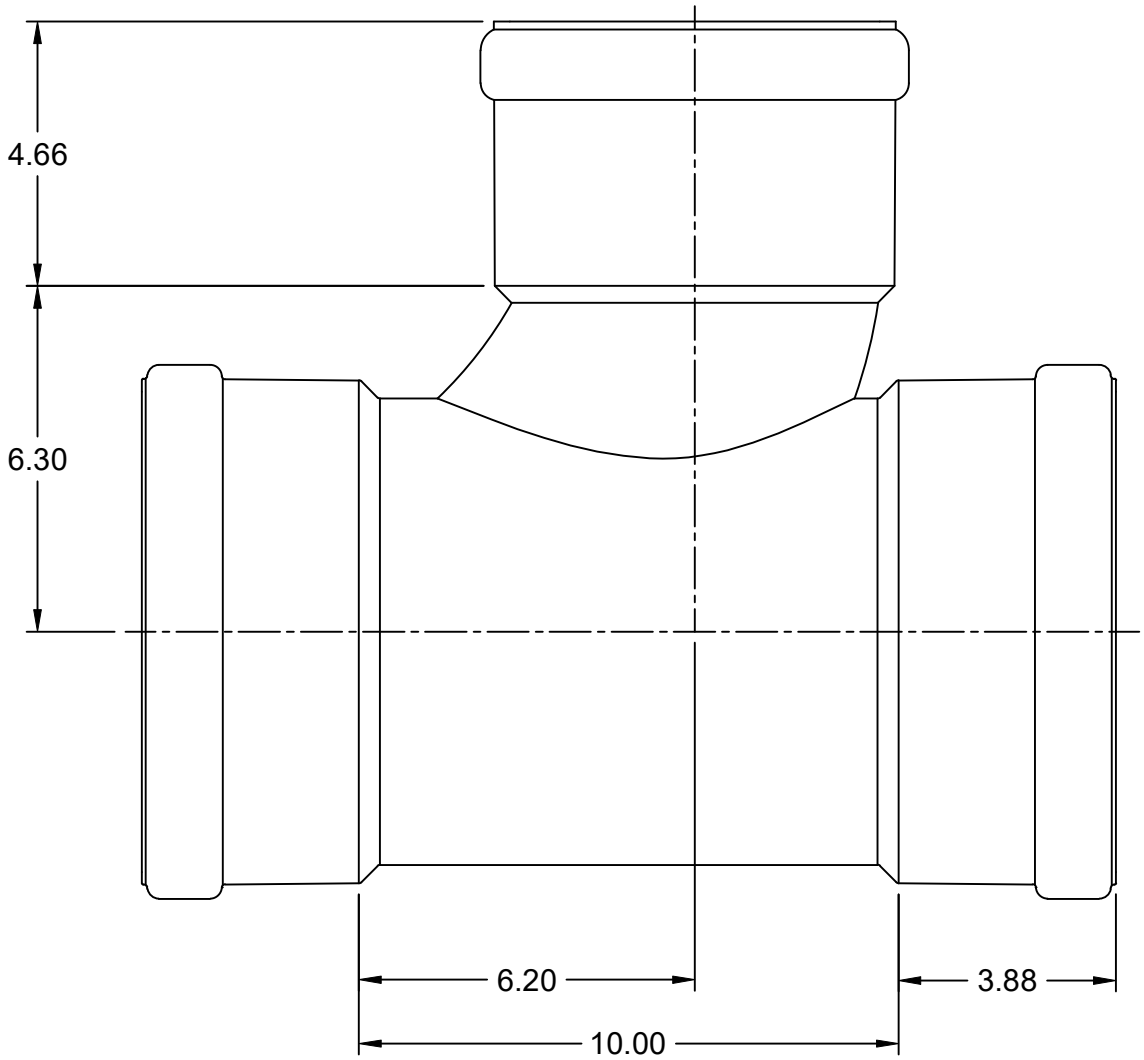

GPK PRODUCTS, INC.

FOR REFERENCE ONLY DIMENSIONS IN INCHES DIMENSIONS SUBJECT TO CHANGE

TITLE

8" x 6" T-Y GxGxG

SDR 26 HWS MAIN x SCH 40 IPS BRANCH

1-800-437-4670 FARGO, ND

DATE 9-14-20 | SCALE NONE | PART NO. 968-0086